STATE OF FLORIDA

DEPARTMENT OF TRANSPORTATION

TYPICAL SECTION PACKAGE

FINANCIAL PROJECT ID 436292-1-22-01
(FEDERAL FUNDS)

VOLUSIA COUNTY (79002000)

STATE ROAD NO.9

I-95 at PIONEER TRAIL INTERCHANGE

APPROVED BY:

Willi am H Cook

Digitally signed by William H Cook
Date: 2020.03.13 15:47:24 -04'00'

THIS ITEM HAS BEEN DIGITALLY SIGNED AND SEALED BY

ON THE DATE ADJACENT TO THE SEAL

PRINTED COPIES OF THIS DOCUMENT ARE NOT CONSIDERED SIGNED AND SEALED AND THE SIGNATURE MUST BE VERIFIED ON ANY ELECTRONIC COPIES.

STANTEC CONSULTING SERVICES, INC.
11315 CORPORATE BLVD., SUITE 105
ORLANDO, FL 32817
WILLIAM COOK, P.E. No. 54693

THE ABOVE NAMED PROFESSIONAL ENGINEER SHALL BE RESPONSIBLE FOR THE FOLLOWING SHEETS IN ACCORDANCE WITH RULE 61G15-23.004, F.A.C.

BEGIN BRIDGE
STA. 48+59.05

END BRIDGE
STA. 51+36.39

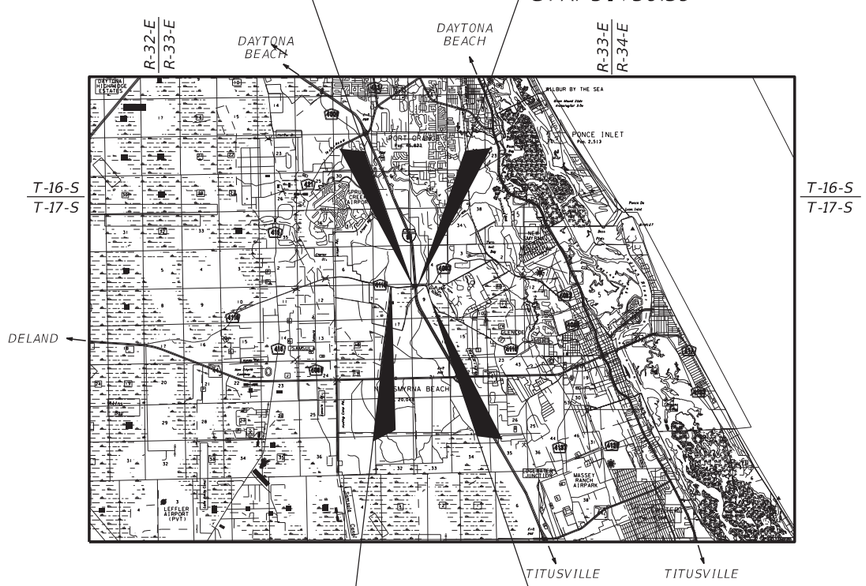

BEGIN PROJECT
℄ CONST. PIONEER TRAIL
STA. 16+59.82

END CONCTRUCTION
℄ CONST. PIONEER TRAIL
STA. 79+15.41

N

0 2 4
Miles

TYPICAL SECTION PACKAGE

SHEET NO.	SHEET DESCRIPTION
1	KEY SHEET
2-6	TYPICAL SECTIONS No. 01-05 (PIONEER TRAIL)
7	TYPICAL SECTION No. 06 (I-95/SR 9)
8-9	TYPICAL SECTION No. 07-08 (RAMPS)
10	TYPICAL SECTION No. 09 (PIONEER TRAIL BRIDGE OVER I-95)

Approved by:

Tadd Kasbeer, P.E.
County Engineer
Volusia County

VOLUSIA COUNTY

TADD KASBEER, P.E.
DIRECTOR HIGHWAY CONSTRUCTION
AND ENGINEERING DIVISION

DATE

TYPICAL SECTION CONCURRENCE:

Mario J Bizzio

Digitally signed by Mario J Bizzio
Date: 2020.03.18 16:46:14 -04'00'

FDOT DISTRICT 5
DESIGN ENGINEER

Gary Skofronick

Digitally signed by Gary Skofronick
DN: OID.0.9.2342.19200300.100.1.1=A01098000000163CFF6B32B00008CB4, CN=Gary Skofronick, OU=FLORIDA DEPARTMENT OF TRANSPORTATION, O=FLORIDA DEPARTMENT OF TRANSPORTATION, C=US
Date: 2020.03.24 16:35:05-04'00'

FDOT DISTRICT 5
STRUCTURES ENGINEER

N/A
FHWA TRANSPORTATION ENGINEER

DESIGN SPEED AND POSTED SPEED CONCURRENCE:

James S Stroz

Digitally signed by James S Stroz
Date: 2020.03.19 09:47:27 -04'00'

FDOT DISTRICT 5
TRAFFIC OPERATIONS ENGINEER

Mario J Bizzio

Digitally signed by Mario J Bizzio
Date: 2020.03.18 16:46:34 -04'00'

FDOT DISTRICT 5
DESIGN ENGINEER

CONTEXT CLASSIFICATION CONCURRENCE:

Digitally signed by: e4090a4f-e1ee-4a44-9bac-bc600e130ff9
DN: CN = e4090a4f-e1ee-4a44-9bac-bc600e130ff9
Date: 2020.03.23 16:22:36 -05'00'

FDOT DISTRICT 5 INTERMODAL SYSTEMS DEVELOPMENT NANAGER

SHEET NO.
1

PROJECT CONTROLS

CONTEXT CLASSIFICATION

( ) C1 : NATURAL
( ) C2 : RURAL
( ) C2T : RURAL TOWN
(X) C3R : SUBURBAN RES.
( ) N/A : L.A. FACILITY
( ) C3C : SUBURBAN COMM.
( ) C4 : URBAN GENERAL
( ) C5 : URBAN CENTER
( ) C6 : URBAN CORE

FUNCTIONAL CLASSIFICATION

( ) INTERSTATE
( ) FREEWAY/EXPWY.
( ) PRINCIPAL ARTERIAL
( ) MINOR ARTERIAL
(X) MAJOR COLLECTOR
( ) MINOR COLLECTOR
( ) LOCAL

HIGHWAY SYSTEM

( ) NATIONAL HIGHWAY SYSTEM
( ) STRATEGIC INTERMODAL SYSTEM
( ) STATE HIGHWAY SYSTEM
(X) OFF-STATE HIGHWAY SYSTEM

ACCESS CLASSIFICATION

( ) 1 - FREEWAY
( ) 2 - RESTRICTIVE w/Service Roads
( ) 3 - RESTRICTIVE w/660 ft. Connection Spacing
( ) 4 - NON-RESTRICTIVE w/2640 ft. Signal Spacing
(X) 5 - RESTRICTIVE w/440 ft. Connection Spacing
( ) 6 - NON-RESTRICTIVE w/1320 ft. Signal Spacing
( ) 7 - BOTH MEDIAN TYPES

CRITERIA

(X) NEW CONSTRUCTION / RECONSTRUCTION
( ) RESURFACING (LA FACILITIES)
( ) RRR (ARTERIALS & COLLECTORS)

POTENTIAL EXCEPTIONS AND VARIATIONS RELATED TO TYPICAL SECTION:

DESIGN MEMO:

1 - BIKE LANE WIDTH
2 - TRAVEL LANE WIDTH

TYPICAL SECTION No. 01

PROJECT DESCRIPTION: I-95 AT PIONEER INTERCHANGE

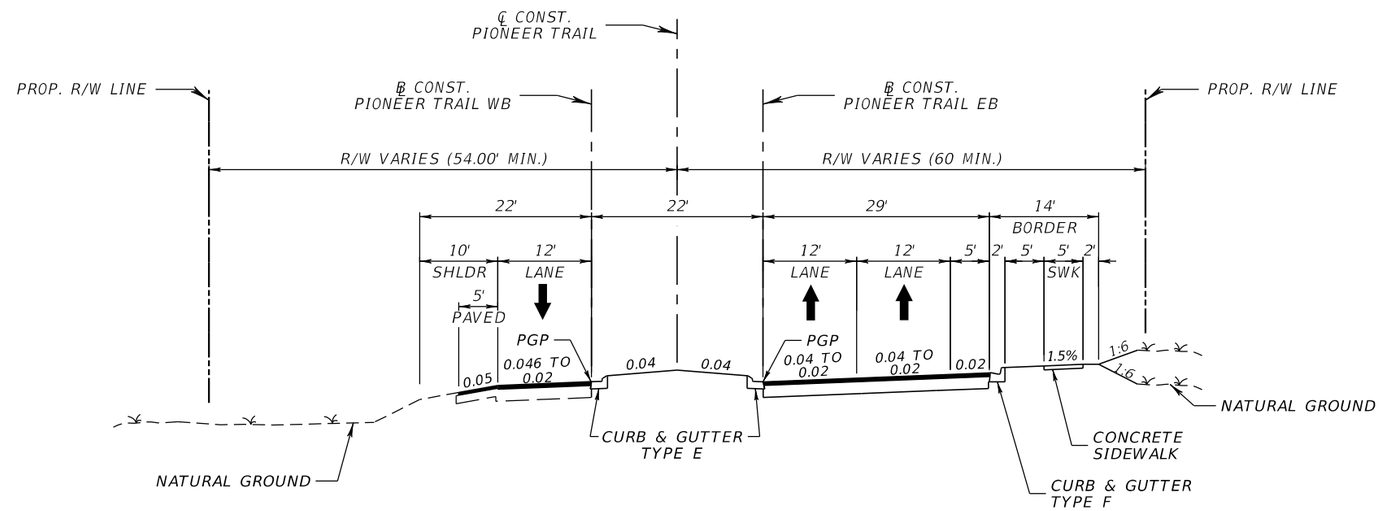

PIONEER TRAIL

STA. 16+59.82 TO STA. 28+07.00 (℄ CONST. PIONEER TRAIL)
DESIGN SPEED = 45 MPH

TRAFFIC DATA

CURRENT YEAR = 2019 AADT = 8,100
ESTIMATED OPENING YEAR = 2025 AADT = 9,800
ESTIMATED DESIGN YEAR = 2045 AADT = 24,000
K = 9.00% D = 55.80% T = 3.90% (24 HOUR)
DESIGN SPEED = 45 MPH
POSTED SPEED = 40 MPH

FINANCIAL PROJECT ID	SHEET NO.
436292-1-22-01	2

THE OFFICIAL RECORD OF THIS SHEET IS THE ELECTRONIC FILE DIGITALLY SIGNED AND SEALED UNDER RULE 61G15-23.004, F.A.C.

PROJECT CONTROLS

CONTEXT CLASSIFICATION

( ) C1 : NATURAL
( ) C2 : RURAL
( ) C2T : RURAL TOWN
(X) C3R : SUBURBAN RES.
( ) N/A : L.A. FACILITY
( ) C3C : SUBURBAN COMM.
( ) C4 : URBAN GENERAL
( ) C5 : URBAN CENTER
( ) C6 : URBAN CORE

FUNCTIONAL CLASSIFICATION

( ) INTERSTATE
( ) FREEWAY/EXPWY.
( ) PRINCIPAL ARTERIAL
( ) MINOR ARTERIAL
(X) MAJOR COLLECTOR
( ) MINOR COLLECTOR
( ) LOCAL

HIGHWAY SYSTEM

( ) NATIONAL HIGHWAY SYSTEM
( ) STRATEGIC INTERMODAL SYSTEM
( ) STATE HIGHWAY SYSTEM
(X) OFF-STATE HIGHWAY SYSTEM

ACCESS CLASSIFICATION

( ) 1 - FREEWAY
( ) 2 - RESTRICTIVE w/Service Roads
( ) 3 - RESTRICTIVE w/660 ft. Connection Spacing
( ) 4 - NON-RESTRICTIVE w/2640 ft. Signal Spacing
(X) 5 - RESTRICTIVE w/440 ft. Connection Spacing
( ) 6 - NON-RESTRICTIVE w/1320 ft. Signal Spacing
( ) 7 - BOTH MEDIAN TYPES

CRITERIA

(X) NEW CONSTRUCTION / RECONSTRUCTION
( ) RESURFACING (LA FACILITIES)
( ) RRR (ARTERIALS & COLLECTORS)

POTENTIAL EXCEPTIONS AND VARIATIONS RELATED TO TYPICAL SECTION:

DESIGN MEMO:

1 - BIKE LANE WIDTH
2 - TRAVEL LANE WIDTH

TYPICAL SECTION No. 02

PROJECT DESCRIPTION: I-95 AT PIONEER INTERCHANGE

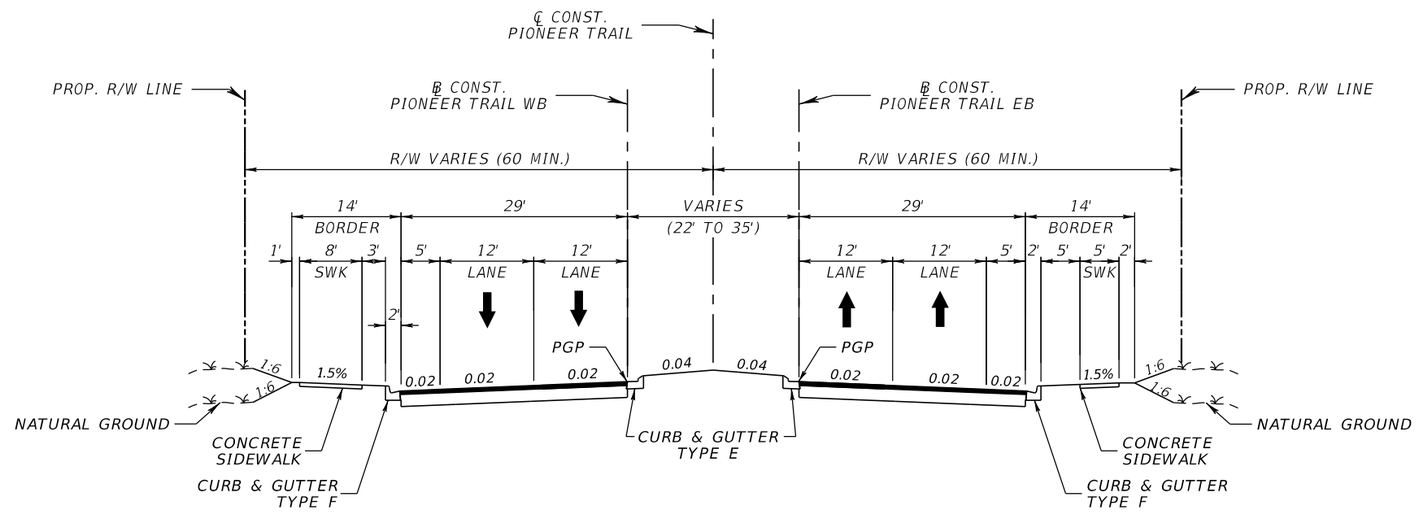

PIONEER TRAIL

STA. 28+07.00 TO STA. 39+07.00 (℄ CONST. PIONEER TRAIL)
DESIGN SPEED = 45 MPH

TRAFFIC DATA

CURRENT YEAR = 2019 AADT = 8,100
ESTIMATED OPENING YEAR = 2025 AADT = 9,800
ESTIMATED DESIGN YEAR = 2045 AADT = 24,000
K = 9.00% D = 55.80% T = 3.90% (24 HOUR)
DESIGN SPEED = 45 MPH
POSTED SPEED = 40 MPH

FINANCIAL PROJECT ID	SHEET NO.
436292-1-22-01	3

THE OFFICIAL RECORD OF THIS SHEET IS THE ELECTRONIC FILE DIGITALLY SIGNED AND SEALED UNDER RULE 61G15-23.004, F.A.C.

PROJECT CONTROLS

CONTEXT CLASSIFICATION

( ) C1 : NATURAL
( ) C2 : RURAL
( ) C2T : RURAL TOWN
(X) C3R : SUBURBAN RES.
( ) N/A : L.A. FACILITY
( ) C3C : SUBURBAN COMM.
( ) C4 : URBAN GENERAL
( ) C5 : URBAN CENTER
( ) C6 : URBAN CORE

FUNCTIONAL CLASSIFICATION

( ) INTERSTATE
( ) FREEWAY/EXPWY.
( ) PRINCIPAL ARTERIAL
( ) MINOR ARTERIAL
(X) MAJOR COLLECTOR
( ) MINOR COLLECTOR
( ) LOCAL

HIGHWAY SYSTEM

( ) NATIONAL HIGHWAY SYSTEM
( ) STRATEGIC INTERMODAL SYSTEM
( ) STATE HIGHWAY SYSTEM
(X) OFF-STATE HIGHWAY SYSTEM

ACCESS CLASSIFICATION

( ) 1 - FREEWAY
( ) 2 - RESTRICTIVE w/Service Roads
( ) 3 - RESTRICTIVE w/660 ft. Connection Spacing
( ) 4 - NON-RESTRICTIVE w/2640 ft. Signal Spacing
(X) 5 - RESTRICTIVE w/440 ft. Connection Spacing
( ) 6 - NON-RESTRICTIVE w/1320 ft. Signal Spacing
( ) 7 - BOTH MEDIAN TYPES

CRITERIA

(X) NEW CONSTRUCTION / RECONSTRUCTION
( ) RESURFACING (LA FACILITIES)
( ) RRR (ARTERIALS & COLLECTORS)

POTENTIAL EXCEPTIONS AND VARIATIONS RELATED TO TYPICAL SECTION:

DESIGN MEMO:

TYPICAL SECTION No. 03

PROJECT DESCRIPTION: I-95 AT PIONEER INTERCHANGE

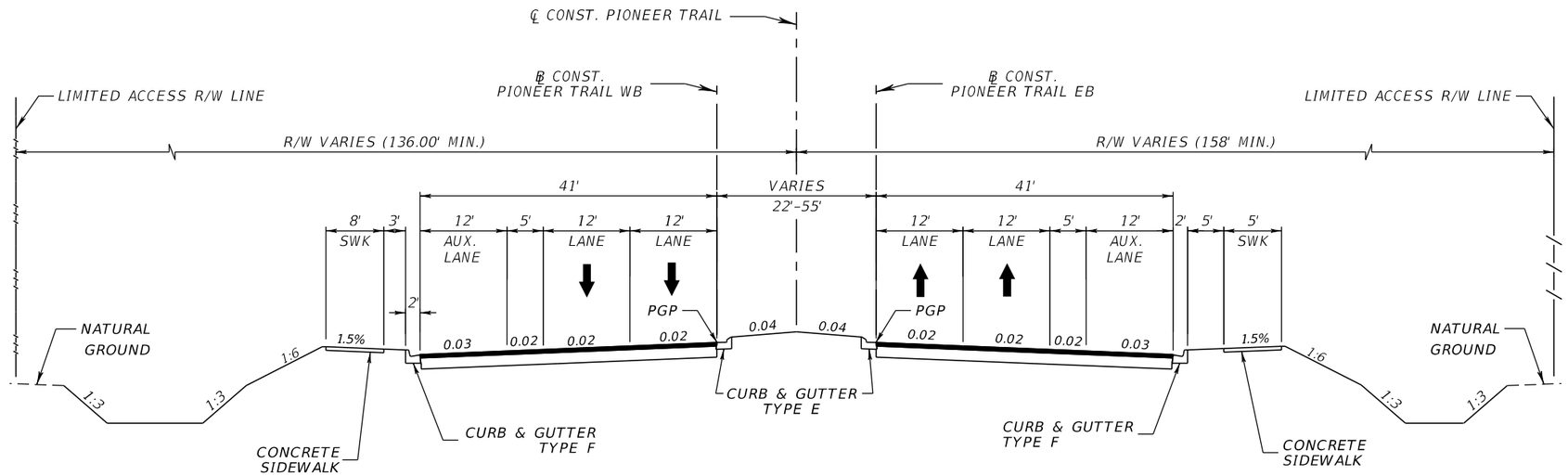

PIONEER TRAIL

STA. 39+07.00 TO STA. 45+25.00 (℄ CONST. PIONEER TRAIL)
DESIGN SPEED = 45 MPH

TRAFFIC DATA

CURRENT YEAR = 2019 AADT = 8,100
ESTIMATED OPENING YEAR = 2025 AADT = 9,800
ESTIMATED DESIGN YEAR = 2045 AADT = 24,000
K = 9.00% D = 55.80% T = 3.90% (24 HOUR)
DESIGN SPEED = 45 MPH
POSTED SPEED = 40 MPH

FINANCIAL PROJECT ID	SHEET NO.
436292-1-22-01	4

THE OFFICIAL RECORD OF THIS SHEET IS THE ELECTRONIC FILE DIGITALLY SIGNED AND SEALED UNDER RULE 61G15-23.004, F.A.C.

PROJECT CONTROLS

CONTEXT CLASSIFICATION

( ) C1 : NATURAL
( ) C2 : RURAL
( ) C2T : RURAL TOWN
(X) C3R : SUBURBAN RES.
( ) N/A : L.A. FACILITY
( ) C3C : SUBURBAN COMM.
( ) C4 : URBAN GENERAL
( ) C5 : URBAN CENTER
( ) C6 : URBAN CORE

FUNCTIONAL CLASSIFICATION

( ) INTERSTATE
( ) FREEWAY/EXPWY.
( ) PRINCIPAL ARTERIAL
( ) MINOR ARTERIAL
(X) MAJOR COLLECTOR
( ) MINOR COLLECTOR
( ) LOCAL

HIGHWAY SYSTEM

( ) NATIONAL HIGHWAY SYSTEM
( ) STRATEGIC INTERMODAL SYSTEM
( ) STATE HIGHWAY SYSTEM
(X) OFF-STATE HIGHWAY SYSTEM

ACCESS CLASSIFICATION

( ) 1 - FREEWAY
(X) 2 - RESTRICTIVE w/Service Roads
( ) 3 - RESTRICTIVE w/660 ft. Connection Spacing
( ) 4 - NON-RESTRICTIVE w/2640 ft. Signal Spacing
( ) 5 - RESTRICTIVE w/440 ft. Connection Spacing
( ) 6 - NON-RESTRICTIVE w/1320 ft. Signal Spacing
( ) 7 - BOTH MEDIAN TYPES

CRITERIA

(X) NEW CONSTRUCTION / RECONSTRUCTION
( ) RESURFACING (LA FACILITIES)
( ) RRR (ARTERIALS & COLLECTORS)

POTENTIAL EXCEPTIONS AND VARIATIONS RELATED TO TYPICAL SECTION:

DESIGN MEMO:

TYPICAL SECTION No. 04

PROJECT DESCRIPTION: I-95 AT PIONEER INTERCHANGE

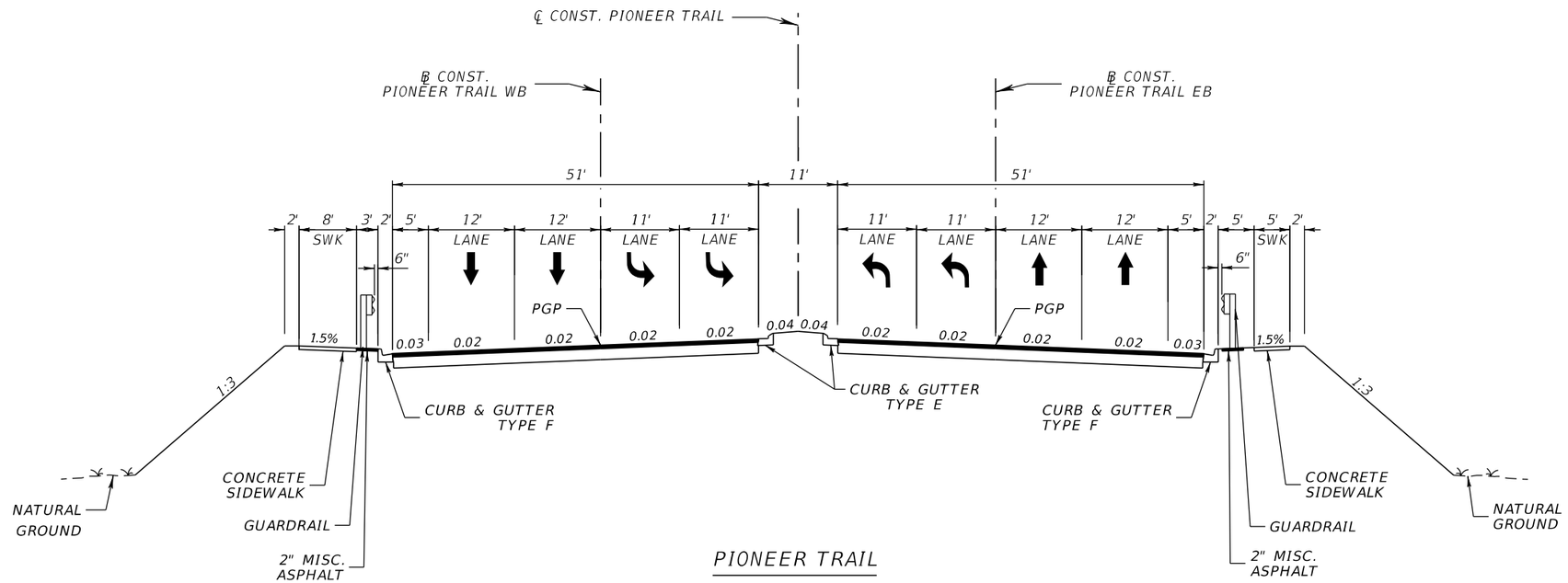

PIONEER TRAIL

STA. 45+25.00 TO STA. 48+59.05 (℄ CONST. PIONEER TRAIL)
STA. 51+36.39 TO STA. 56+40.00 (℄ CONST. PIONEER TRAIL)
DESIGN SPEED = 45 MPH

TRAFFIC DATA

CURRENT YEAR = 2019 AADT = 8,100
ESTIMATED OPENING YEAR = 2025 AADT = 9,800
ESTIMATED DESIGN YEAR = 2045 AADT = 24,000
K = 9.00% D = 55.80% T = 3.90% (24 HOUR)
DESIGN SPEED = 45 MPH
POSTED SPEED = 40 MPH

FINANCIAL PROJECT ID	SHEET NO.
436292-1-22-01	5

THE OFFICIAL RECORD OF THIS SHEET IS THE ELECTRONIC FILE DIGITALLY SIGNED AND SEALED UNDER RULE 61G15-23.004, F.A.C.

PROJECT CONTROLS

CONTEXT CLASSIFICATION

( ) C1 : NATURAL
( ) C2 : RURAL
( ) C2T : RURAL TOWN
(X) C3R : SUBURBAN RES.
( ) N/A : L.A. FACILITY
( ) C3C : SUBURBAN COMM.
( ) C4 : URBAN GENERAL
( ) C5 : URBAN CENTER
( ) C6 : URBAN CORE

FUNCTIONAL CLASSIFICATION

( ) INTERSTATE
( ) FREEWAY/EXPWY.
( ) PRINCIPAL ARTERIAL
( ) MINOR ARTERIAL
(X) MAJOR COLLECTOR
( ) MINOR COLLECTOR
( ) LOCAL

HIGHWAY SYSTEM

( ) NATIONAL HIGHWAY SYSTEM
( ) STRATEGIC INTERMODAL SYSTEM
( ) STATE HIGHWAY SYSTEM
(X) OFF-STATE HIGHWAY SYSTEM

ACCESS CLASSIFICATION

( ) 1 - FREEWAY
( ) 2 - RESTRICTIVE w/Service Roads
( ) 3 - RESTRICTIVE w/660 ft. Connection Spacing
( ) 4 - NON-RESTRICTIVE w/2640 ft. Signal Spacing
(X) 5 - RESTRICTIVE w/440 ft. Connection Spacing
( ) 6 - NON-RESTRICTIVE w/1320 ft. Signal Spacing
( ) 7 - BOTH MEDIAN TYPES

CRITERIA

(X) NEW CONSTRUCTION / RECONSTRUCTION
( ) RESURFACING (LA FACILITIES)
( ) RRR (ARTERIALS & COLLECTORS)

POTENTIAL EXCEPTIONS AND VARIATIONS RELATED TO TYPICAL SECTION:

DESIGN MEMO:

TYPICAL SECTION No. 05

PROJECT DESCRIPTION: I-95 AT PIONEER INTERCHANGE

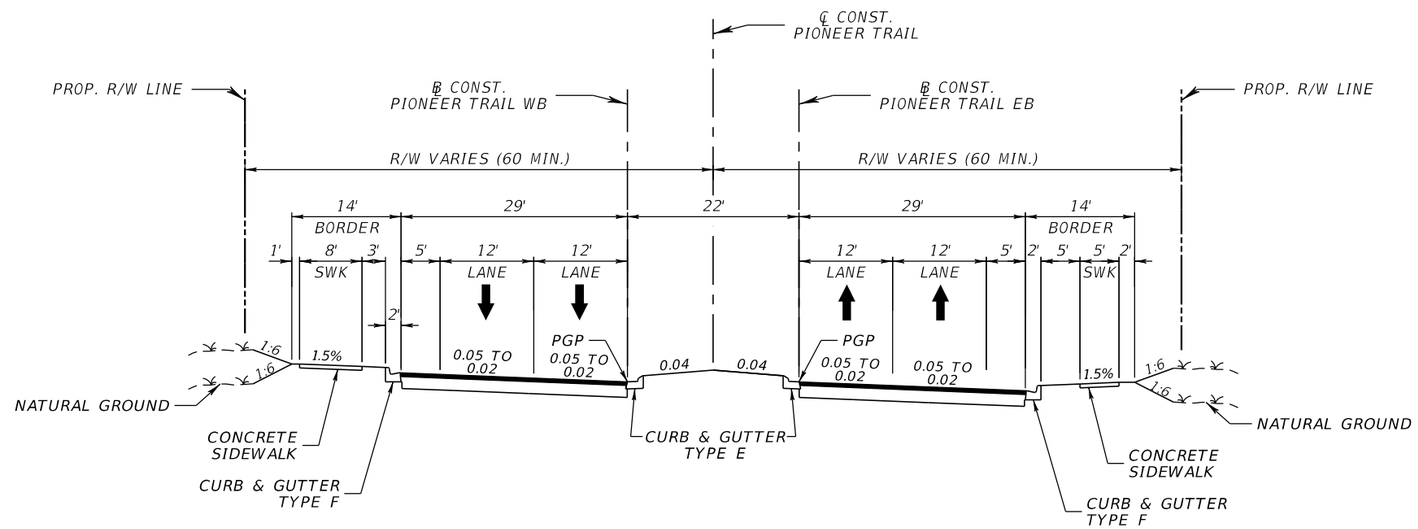

PIONEER TRAIL

STA. 56+40.00 TO STA. 79+15.41 (℄ CONST. PIONEER TRAIL)
DESIGN SPEED = 45 MPH

TRAFFIC DATA

CURRENT YEAR = 2019 AADT = 8,100
ESTIMATED OPENING YEAR = 2025 AADT = 9,800
ESTIMATED DESIGN YEAR = 2045 AADT = 24,000
K = 9.00% D = 55.80% T = 3.90% (24 HOUR)
DESIGN SPEED = 45 MPH
POSTED SPEED = 40 MPH

FINANCIAL PROJECT ID	SHEET NO.
436292-1-22-01	6

THE OFFICIAL RECORD OF THIS SHEET IS THE ELECTRONIC FILE DIGITALLY SIGNED AND SEALED UNDER RULE 61G15-23.004, F.A.C.

PROJECT CONTROLS

CONTEXT CLASSIFICATION

( ) C1 : NATURAL
( ) C2 : RURAL
( ) C2T : RURAL TOWN
( ) C3R : SUBURBAN RES.
( ) C3C : SUBURBAN COMM.
( ) C4 : URBAN GENERAL
( ) C5 : URBAN CENTER
( ) C6 : URBAN CORE
(X) N/A : L.A. FACILITY

FUNCTIONAL CLASSIFICATION

(X) INTERSTATE
( ) FREEWAY/EXPWY.
( ) PRINCIPAL ARTERIAL
( ) MINOR ARTERIAL
( ) MAJOR COLLECTOR
( ) MINOR COLLECTOR
( ) LOCAL

HIGHWAY SYSTEM

(X) NATIONAL HIGHWAY SYSTEM
(X) STRATEGIC INTERMODAL SYSTEM
(X) STATE HIGHWAY SYSTEM
( ) OFF-STATE HIGHWAY SYSTEM

ACCESS CLASSIFICATION

(X) 1 - FREEWAY
( ) 2 - RESTRICTIVE w/Service Roads
( ) 3 - RESTRICTIVE w/660 ft. Connection Spacing
( ) 4 - NON-RESTRICTIVE w/2640 ft. Signal Spacing
( ) 5 - RESTRICTIVE w/440 ft. Connection Spacing
( ) 6 - NON-RESTRICTIVE w/1320 ft. Signal Spacing
( ) 7 - BOTH MEDIAN TYPES

CRITERIA

(X) NEW CONSTRUCTION / RECONSTRUCTION
( ) RESURFACING (LA FACILITIES)
( ) RRR (ARTERIALS & COLLECTORS)

POTENTIAL EXCEPTIONS AND VARIATIONS RELATED TO TYPICAL SECTION:

DESIGN MEMO:

TYPICAL SECTION No. 06

PROJECT DESCRIPTION: I-95 AT PIONEER INTERCHANGE

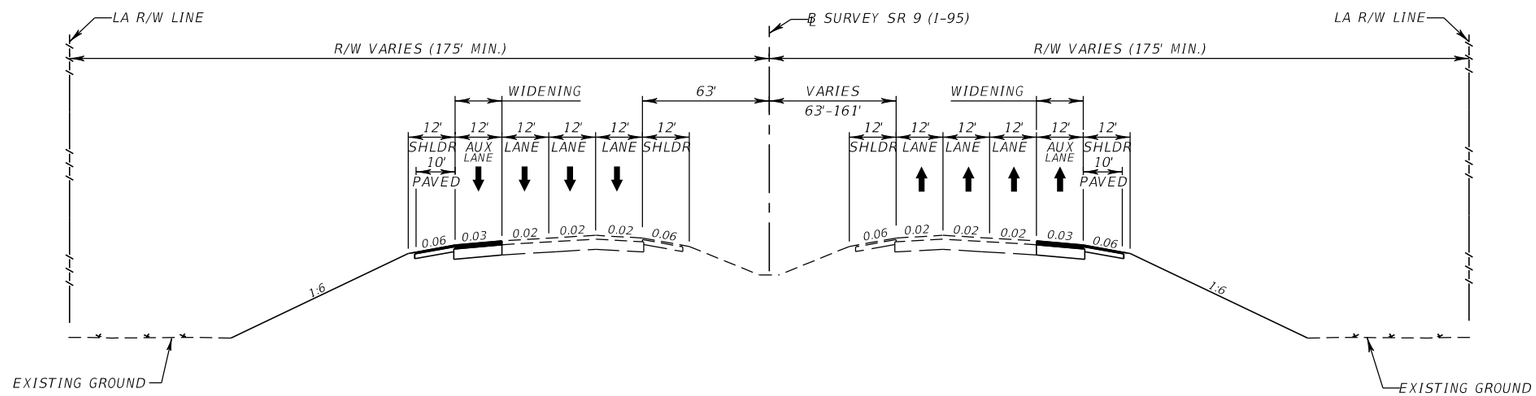

SR 9/ I-95

FROM STA. 4676+81.45 TO STA. 4685+44.28 (℄ SR 9 SOUTHBOUND)
FROM STA. 4703+86.15 TO STA. 4714+00.97 (℄ SR 9 SOUTHBOUND)
FROM STA. 4726+51.89 TO STA. 4734+51.89 (℄ SR 9 SOUTHBOUND)

FROM STA. 4703+69.24 TO STA. 4714+59.92 (℄ SR 9 NORTHBOUND)
FROM STA. 4731+19.40 TO STA. 4739+99.40 (℄ SR 9 NORTHBOUND)
DESIGN SPEED = 70 MPH

TRAFFIC DATA

YEAR = 2018 AADT = 46,000
ESTIMATED OPENING YEAR = 2025 AADT = 56,000
ESTIMATED DESIGN YEAR = 2045 AADT = 83,000
K = 9.00% D = 55.00% T = 13.00% (24 HOUR)
DESIGN SPEED = 70 MPH
POSTED SPEED = 70 MPH

FINANCIAL PROJECT ID	SHEET NO.
436292-1-22-01	7

THE OFFICIAL RECORD OF THIS SHEET IS THE ELECTRONIC FILE DIGITALLY SIGNED AND SEALED UNDER RULE 61G15-23.004, F.A.C.

PROJECT CONTROLS

CONTEXT CLASSIFICATION

( ) C1 : NATURAL
( ) C2 : RURAL
( ) C2T : RURAL TOWN
( ) C3R : SUBURBAN RES.
( ) C3C : SUBURBAN COMM.
( ) C4 : URBAN GENERAL
( ) C5 : URBAN CENTER
( ) C6 : URBAN CORE
(X) N/A : L.A. FACILITY

FUNCTIONAL CLASSIFICATION

(X) INTERSTATE
(X) FREEWAY/EXPWY.
( ) PRINCIPAL ARTERIAL
( ) MINOR ARTERIAL
( ) MAJOR COLLECTOR
( ) MINOR COLLECTOR
( ) LOCAL

HIGHWAY SYSTEM

(X) NATIONAL HIGHWAY SYSTEM
(X) STRATEGIC INTERMODAL SYSTEM
(X) STATE HIGHWAY SYSTEM
( ) OFF-STATE HIGHWAY SYSTEM

ACCESS CLASSIFICATION

(X) 1 - FREEWAY
( ) 2 - RESTRICTIVE w/Service Roads
( ) 3 - RESTRICTIVE w/660 ft. Connection Spacing
( ) 4 - NON-RESTRICTIVE w/2640 ft. Signal Spacing
( ) 5 - RESTRICTIVE w/440 ft. Connection Spacing
( ) 6 - NON-RESTRICTIVE w/1320 ft. Signal Spacing
( ) 7 - BOTH MEDIAN TYPES

CRITERIA

(X) NEW CONSTRUCTION / RECONSTRUCTION
( ) RESURFACING (LA FACILITIES)
( ) RRR (ARTERIALS & COLLECTORS)

POTENTIAL EXCEPTIONS AND VARIATIONS RELATED TO TYPICAL SECTION:

VARIATION MEMO:

1 - RAMP I BORDER WIDTH

TYPICAL SECTION No. 07

PROJECT DESCRIPTION: I-95 AT PIONEER INTERCHANGE

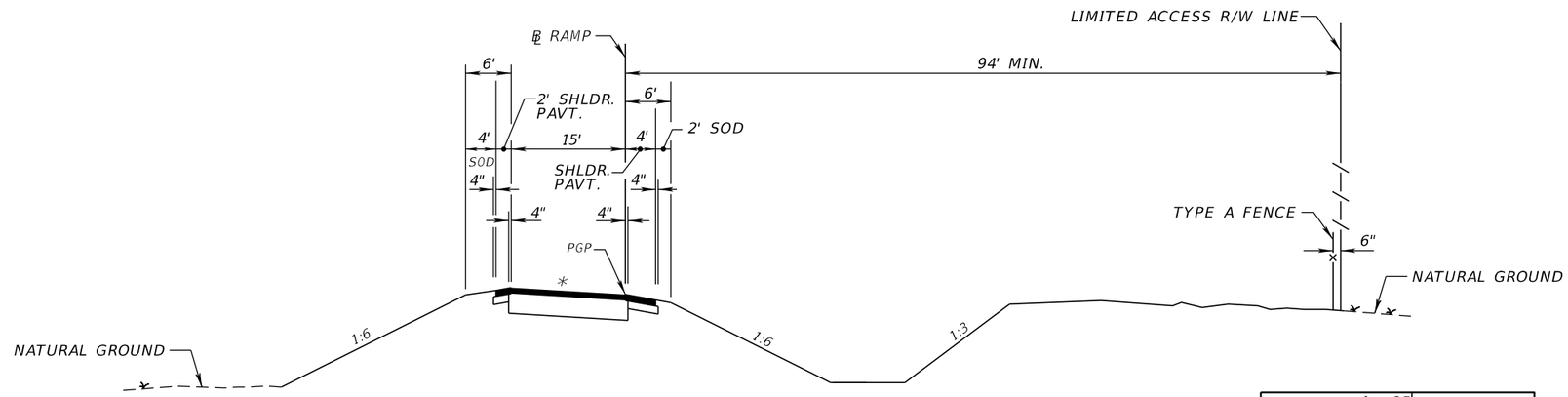

SR 9 / PIONEER TRAIL INTERCHANGE

SINGLE LANE RAMP

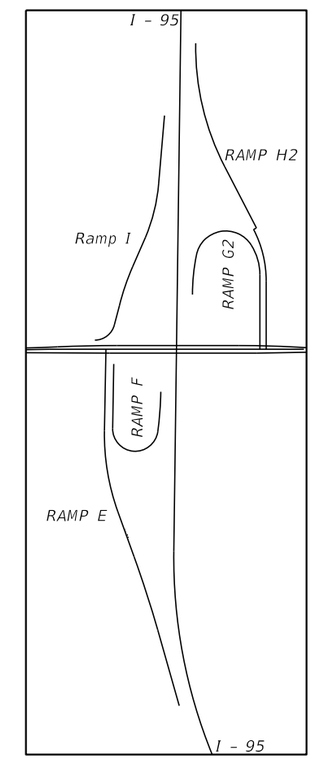

SINGLE LANE RAMP						
RAMP	RAMP STATIONS	POSTED SPEED MPH	DESIGN SPEED MPH	e	CLEAR ZONE	BORDER WIDTH MIN. (FT.)
F	STA. 601+34.95 TO STA. 612+64.40	25	30	0.020-0.096	10	N/A
G2	STA. 701+07.02 TO STA. 710+43.25	25	30-50	0.065-0.10	10-14	N/A
I	STA. 900+00.00 TO STA. 917+82.40	30	25-50	0.025-0.079	10-14	73

TRAFFIC DATA

RAMP I

ESTIMATED OPENING YEAR = 2025 AADT = 1,600
ESTIMATED DESIGN YEAR = 2045 AADT = 4,700
K = 9.0% D = 100% T = 13.0% (24 HOUR)

RAMP F

ESTIMATED OPENING YEAR = 2025 AADT = 1,200
ESTIMATED DESIGN YEAR = 2045 AADT = 3,700
K = 9.0% D = 100% T = 13.0% (24 HOUR)

RAMP G2

ESTIMATED OPENING YEAR = 2025 AADT = 2,000
ESTIMATED DESIGN YEAR = 2045 AADT = 6,000
K = 9.0% D = 100% T = 13.0% (24 HOUR)

FINANCIAL PROJECT ID	SHEET NO.
436292-1-22-01	8

THE OFFICIAL RECORD OF THIS SHEET IS THE ELECTRONIC FILE DIGITALLY SIGNED AND SEALED UNDER RULE 61G15-23.004, F.A.C.

PROJECT CONTROLS

CONTEXT CLASSIFICATION

( ) C1 : NATURAL
( ) C2 : RURAL
( ) C2T : RURAL TOWN
( ) C3R : SUBURBAN RES.
( ) C3C : SUBURBAN COMM.
( ) C4 : URBAN GENERAL
( ) C5 : URBAN CENTER
( ) C6 : URBAN CORE
(X) N/A : L.A. FACILITY

FUNCTIONAL CLASSIFICATION

(X) INTERSTATE
(X) FREEWAY/EXPWY.
( ) PRINCIPAL ARTERIAL
( ) MINOR ARTERIAL
( ) MAJOR COLLECTOR
( ) MINOR COLLECTOR
( ) LOCAL

HIGHWAY SYSTEM

(X) NATIONAL HIGHWAY SYSTEM
(X) STRATEGIC INTERMODAL SYSTEM
(X) STATE HIGHWAY SYSTEM
( ) OFF-STATE HIGHWAY SYSTEM

ACCESS CLASSIFICATION

(X) 1 - FREEWAY
( ) 2 - RESTRICTIVE w/Service Roads
( ) 3 - RESTRICTIVE w/660 ft. Connection Spacing
( ) 4 - NON-RESTRICTIVE w/2640 ft. Signal Spacing
( ) 5 - RESTRICTIVE w/440 ft. Connection Spacing
( ) 6 - NON-RESTRICTIVE w/1320 ft. Signal Spacing
( ) 7 - BOTH MEDIAN TYPES

CRITERIA

(X) NEW CONSTRUCTION / RECONSTRUCTION
( ) RESURFACING (LA FACILITIES)
( ) RRR (ARTERIALS & COLLECTORS)

POTENTIAL EXCEPTIONS AND VARIATIONS RELATED TO TYPICAL SECTION:

VARIATION MEMO:

1 - RAMP E BORDER WIDTH

TYPICAL SECTION No. 08

PROJECT DESCRIPTION: I-95 AT PIONEER INTERCHANGE

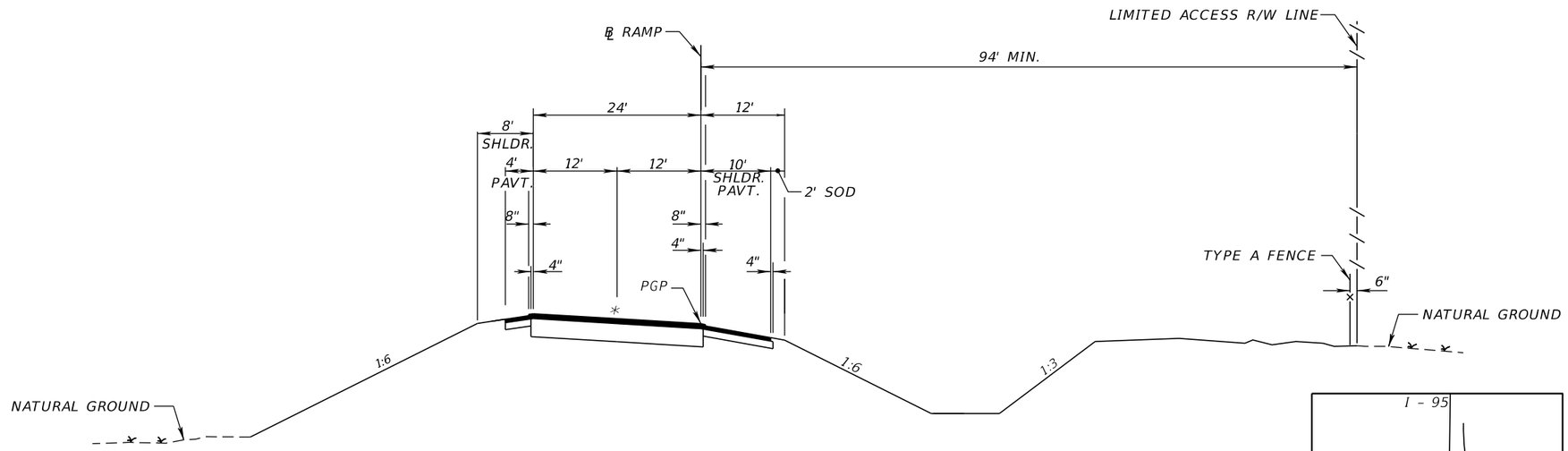

SR 9 / PIONEER TRAIL INTERCHANGE

DUAL LANE RAMP

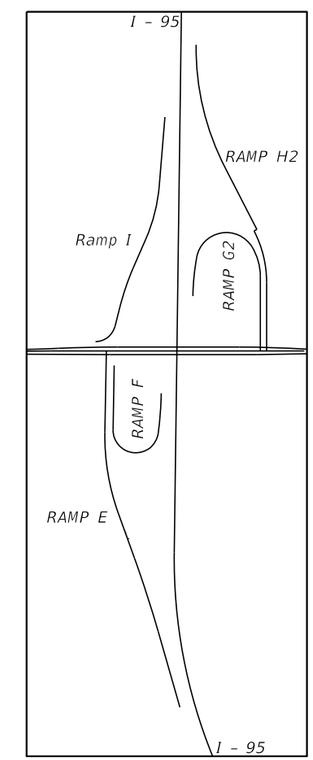

DUAL LANE RAMP						
RAMP	RAMP STATIONS	POSTED SPEED MPH	DESIGN SPEED MPH	*e	CLEAR ZONE	BORDER WIDTH MIN. (FT.)
E	STA. 505+76.14 TO STA. 518+00.00	30	35-50	0.020-0.096	18-24	70
H2	STA. 808+92.50 TO STA. 822+27.25	30	40-50	0.065-0.10	18-24	94

TRAFFIC DATA

RAMP E

ESTIMATED OPENING YEAR = 2025 AADT = 2,000
ESTIMATED DESIGN YEAR = 2045 AADT = 6,000
K = 9.0% D = 100% T = 13.0% (24 HOUR)

RAMP H2

ESTIMATED OPENING YEAR = 2025 AADT = 2,800
ESTIMATED DESIGN YEAR = 2045 AADT = 8,400
K = 9.0% D = 100% T = 13.0% (24 HOUR)

FINANCIAL PROJECT ID	SHEET NO.
436292-1-22-01	9

THE OFFICIAL RECORD OF THIS SHEET IS THE ELECTRONIC FILE DIGITALLY SIGNED AND SEALED UNDER RULE 61G15-23.004, F.A.C.

PROJECT CONTROLS

CONTEXT CLASSIFICATION

( ) C1 : NATURAL
( ) C2 : RURAL
( ) C2T : RURAL TOWN
(X) C3R : SUBURBAN RES.
( ) N/A : L.A. FACILITY
( ) C3C : SUBURBAN COMM.
( ) C4 : URBAN GENERAL
( ) C5 : URBAN CENTER
( ) C6 : URBAN CORE

FUNCTIONAL CLASSIFICATION

( ) INTERSTATE
( ) FREEWAY/EXPWY.
( ) PRINCIPAL ARTERIAL
( ) MINOR ARTERIAL
(X) MAJOR COLLECTOR
( ) MINOR COLLECTOR
( ) LOCAL

HIGHWAY SYSTEM

( ) NATIONAL HIGHWAY SYSTEM
( ) STRATEGIC INTERMODAL SYSTEM
( ) STATE HIGHWAY SYSTEM
(X) OFF-STATE HIGHWAY SYSTEM

ACCESS CLASSIFICATION

( ) 1 - FREEWAY
( ) 2 - RESTRICTIVE w/Service Roads
( ) 3 - RESTRICTIVE w/660 ft. Connection Spacing
( ) 4 - NON-RESTRICTIVE w/2640 ft. Signal Spacing
(X) 5 - RESTRICTIVE w/440 ft. Connection Spacing
( ) 6 - NON-RESTRICTIVE w/1320 ft. Signal Spacing
( ) 7 - BOTH MEDIAN TYPES

CRITERIA

(X) NEW CONSTRUCTION / RECONSTRUCTION
( ) RESURFACING (LA FACILITIES)
( ) RRR (ARTERIALS & COLLECTORS)

POTENTIAL EXCEPTIONS AND VARIATIONS RELATED TO TYPICAL SECTION:

DESIGN MEMO:

TYPICAL SECTION No. 09

PROJECT DESCRIPTION: I-95 AT PIONEER INTERCHANGE

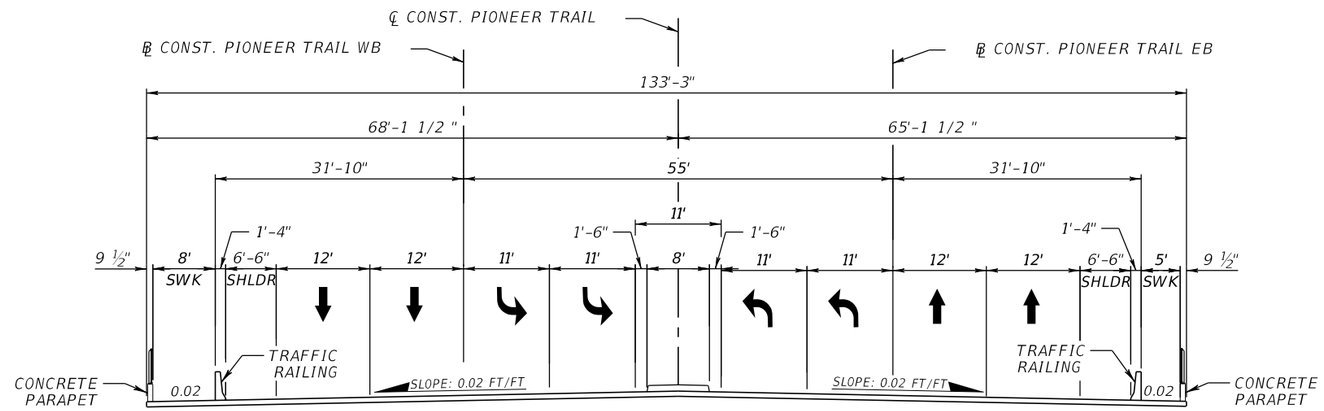

PIONEER TRAIL OVER I-95 (BRIDGE No. TBD)

STA. 48+59.05 TO STA. 51+36.39 (℄ CONST. PIONEER TRAIL)
DESIGN SPEED = 45 MPH

TRAFFIC DATA

CURRENT YEAR = 2019 AADT = 8,100
ESTIMATED OPENING YEAR = 2025 AADT = 9,800
ESTIMATED DESIGN YEAR = 2045 AADT = 24,000
K = 9.00% D = 55.80% T = 3.90% (24 HOUR)
DESIGN SPEED = 45 MPH
POSTED SPEED = 40 MPH

FINANCIAL PROJECT ID	SHEET NO.
436292-1-22-01	10

THE OFFICIAL RECORD OF THIS SHEET IS THE ELECTRONIC FILE DIGITALLY SIGNED AND SEALED UNDER RULE 61G15-23.004, F.A.C.